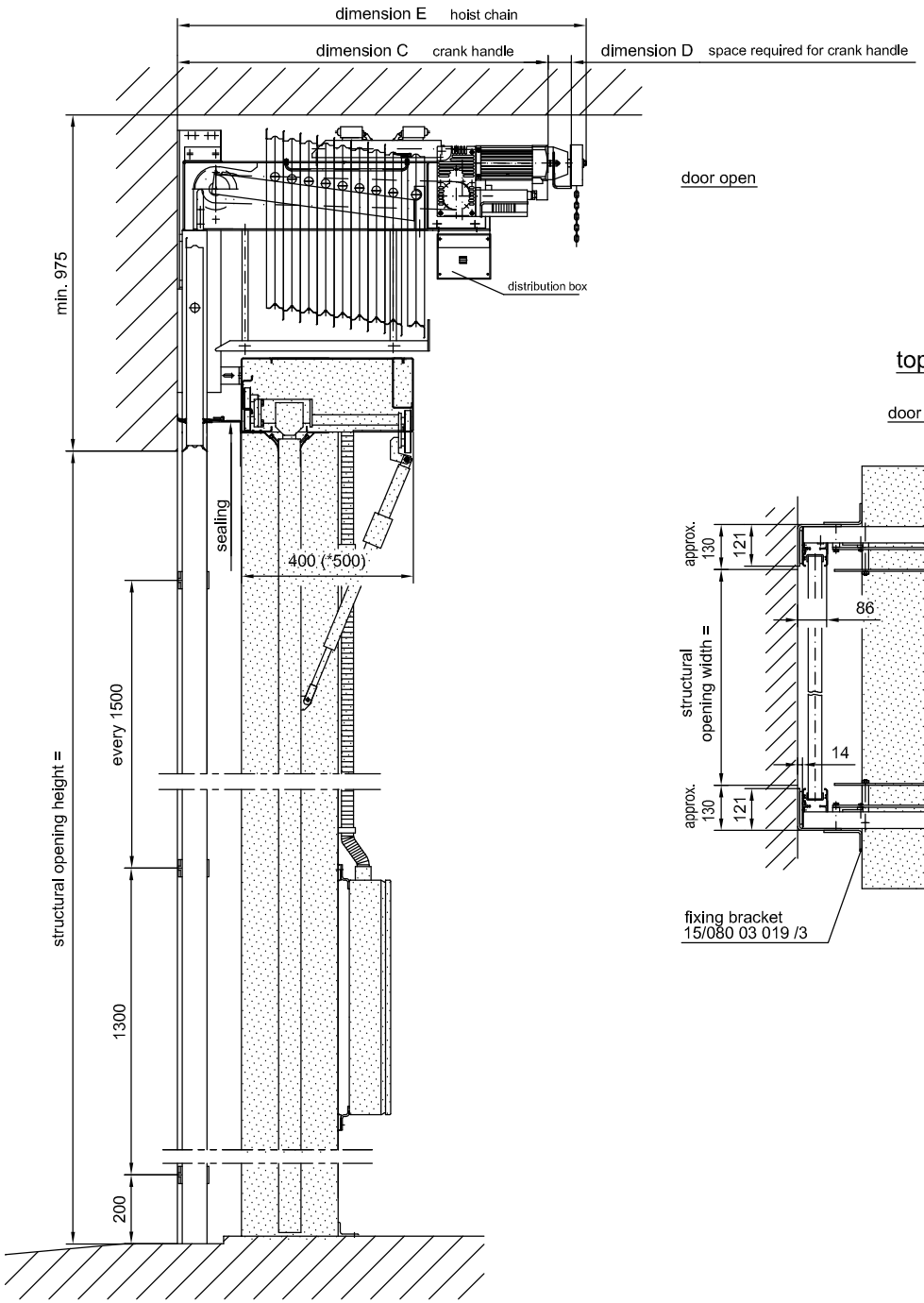

top view

door closed

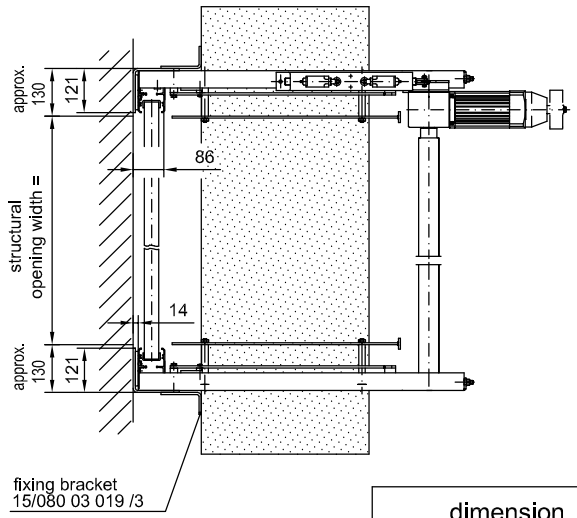

mounting and fixing details

behind the reveal
fixing bracket
15/006 03 009 /4

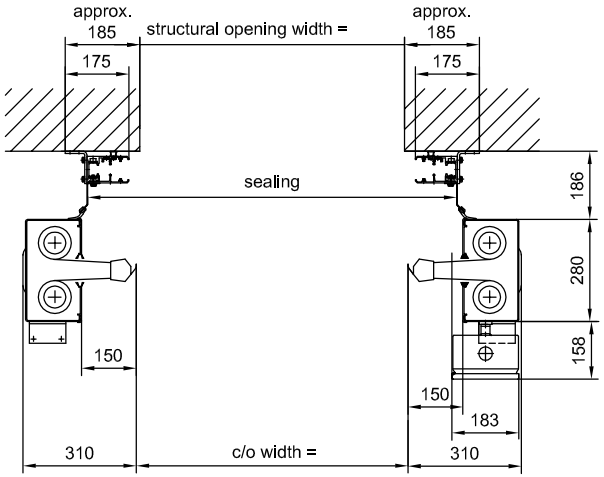

*500 = for c/o height ≥ 3300
*500 = for c/o width ≥ 3500

dimension "structural opening height" *	door panels	dimension "C" crank handle		dimension "E" hoist chain	
		A130 E/29 130 Nm	A150 E/27 150Nm	A130 E/29 130 Nm	A150 E/27 150Nm
up to 3000	up to 6 door panels	882	-----	992	-----
from 3000 up to 5000	7-10 door panels	1080	1150	1190	1260
	dimension "D"	approx.150	approx.150		

* other dimensions are available on request

subject to technical alterations!

HT 40 with NOVOSPRINT HS 5 V	April 2008	BUTZBACH MADE IN GERMANY
technical data sheet; door combination	CAD: ht40-novo	Industrietore · Weiherstr.16 D - 89293 Kellmünz
05/232/2	Urheberschutzvermerk DIN 34	